CompenKNet: An Intelligent State Estimation Method with Model Errors Compensation

1st Bing Huang
College of Electronic Science and Technology
National University of Defense Technology
Changsha, China
huangbing24@nudt.edu.cn

2nd Han Zou
College of Electronic Science and Technology
National University of Defense Technology
Changsha, China
932501425@qq.com

3rd Chao Ma
College of Electronic Science and Technology
National University of Defense Technology
Changsha, China
machao0408@nudt.edu.cn

4th Yuan Huang
College of Electronic Science and Technology
National University of Defense Technology
Changsha, China
huangyuan09@nudt.edu.cn

5th Miao Li
College of Electronic Science and Technology
National University of Defense Technology
Changsha, China
lm8866@nudt.edu.cn

6th Weidong Sheng
College of Electronic Science and Technology
National University of Defense Technology
Changsha, China
shengweidong1111@sohu.com

***Abstract*—Due to the absence of precise prior knowledge, model errors induced by model approximation are ubiquitous in state estimation. Such errors impose substantial degradation on the performance of conventional state estimation approaches. To address this issue, we propose CompenKNet, which incorporates KalmanNet with a dedicated compensation network to enable adaptive state estimation with explicit model error compensation. Featuring a modular dual-branch structure, the algorithm decouples yet jointly optimizes the learning of the Kalman gain and model error compensation, thereby alleviating the adverse impacts of model errors. Furthermore, a three-stage training pipeline is devised to optimize network parameters progressively via pre-training and joint fine-tuning. Extensive experiments on both synthetic and real-world datasets validate that CompenKNet achieves superior performance over state-of-the-art algorithms.**

***Index Terms*—state estimation, kalman filter, hybrid, compensation, aerospace information processing**

I. Introduction

State estimation serves as a core task in aerospace information processing fields such as airspace surveillance [1], UAV object tracking [2], and other related applications. It demands continuous observation and accurate estimation of target motion states, behaviors, and state changes. The model-based methods have long been dominant, represented by the Kalman Filter (KF) [3] and its variants including Extended Kalman Filter (EKF) [4], Unscented Kalman Filter (UKF) [5] and so on. The performance of such methods relies heavily on accurate state-space (SS) models. Nevertheless, these conventional approaches encounter unprecedented challenges amid the increasing diversity of targets and growing complexity of motion patterns. In the absence of sufficient prior information, model errors are pervasive in state estimation, leading to severe performance degradation.

With the advancement of deep learning, data-driven methods have emerged as a compelling alternative [6]. However, such data-driven approaches commonly suffer from the scarcity of high-quality training data and limited interpretability. Hybrid methods combine the merits of both model-driven and data-driven paradigms, preserving desirable stability while improving adaptability to complex scenarios. KalmanNet represents a typical hybrid framework [7]. Nonetheless, existing hybrid methods still confront critical limitations: they cannot adequately address the pervasive problem of model errors.

To this end, a novel hybrid state estimation named CompenKNet is proposed. The core idea is to decouple the Kalman gain (KG) learning and model errors compensation tasks while ensuring joint optimization of the entire filtering process.The main contributions of this work are summarized as follows:

- A modular CompenKNet is proposed, combining KalmanNet with a dedicated CompenNet to realize dual-branch fusion of gain learning and error compensation.
- The CompenNet module employs a GRU-based structure with layer normalization (LN) and fine initialization, enabling efficient learning of model errors compensation.
- A three-stage joint training strategy is devised to enhance the overall state estimation accuracy and training robustness.
- Extensive experiments on synthetic and real-world Michigan NCLT dataset demonstrate that CompenKNet outper-

forms the state-of-the-art methods.

The remainder is organized as follows. Section II introduces the SS model and the basic knowledge. In Section III, the proposed CompenKNet is introduced in details. Section IV presented experimental results to demonstrate the effectiveness of CompenKNet. Section V draws a conclusion of the paper.

II. Problem Formulation

A. State-space Model

State-space model is of vital importance in state estimation. Generally, the SS model comprises a state transition model and a measurement model. The state transition equation characterizes the evolution of motion patterns, whereas the measurement equation is typically sensor-dependent. Here, a discrete-time nonlinear SS model is formulated as (1) and (2).

$$\mathbf{x}_k = f(\mathbf{x}_{k-1}) + \mathbf{q}_k \tag{1}$$

$$\mathbf{y}_k = h(\mathbf{x}_k) + \mathbf{r}_k \tag{2}$$

where, nonlinear function $f : \mathbb{R}^N \times \mathbb{R}^L \rightarrow \mathbb{R}^N$ describes the motion changes. The state $\mathbf{x}_{k-1}$ transits to $\mathbf{x}_k$ with the addition of a Gaussian random vector $\mathbf{q}_k \sim \mathcal{N}(0, \mathbf{Q}_k)$. While, the nonlinear function $h : \mathbb{R}^N \rightarrow \mathbb{R}^M$ represents the characteristics of sensors and $\mathbf{r}_k$ is a zero-mean Gaussian random vector with unknown covariance $\mathbf{R}_k$.

B. Classical Kalman Filter Framework

State estimation aims to recover the target motion state $\mathbf{x}_k$ from noisy sensor measurements under the minimum mean square error criterion. The Kalman filtering framework represents the most classical solution for state estimation. Since (1) and (2) describe discrete-time nonlinear state-space models, the standard KF cannot be directly applied. Instead, linearization-based variants such as EKF and UKF are widely adopted. Taking EKF as an illustration, the linearized state-space model is given by (3) and (4), respectively:

$$\mathbf{x}_k = \mathbf{F}_k \mathbf{x}_{k-1} + \mathbf{q}_k \tag{3}$$

$$\mathbf{y}_k = \mathbf{H}_k \mathbf{x}_k + \mathbf{r}_k \tag{4}$$

where, $\mathbf{F}_{k-1} = \frac{\partial \mathbf{f}}{\partial \mathbf{x}}\big|_{\mathbf{x}=\hat{\mathbf{x}}_{k-1}}$ and $\mathbf{H}_k = \frac{\partial \mathbf{h}}{\partial \mathbf{x}}\big|_{\mathbf{x}=\hat{\mathbf{x}}_{k|k-1}}$ are the Jacobian matrices of the nonlinear state transition function and measurement function, respectively.

Furthermore, the classic Kalman filtering framework comprises two core stages: the prediction step and the update step.

a) Prediction Step: In the prediction stage, the prior state estimate and intermediate parameters at the current time step are computed based on the posterior state estimate from the previous time step.

b) Update Step: In the update stage, the prior state estimate derived from the prediction step is refined using the sensor measurement at the current time step, yielding the posterior state estimate.

III. CompenKNet Algorithm

A. Overall Architecture

Relying solely on Kalman gain (KG) learning to alleviate model errors is often insufficient due to the inherent bias in estimation. Accordingly, the proposed CompenKNet employs a dual-branch architecture to decouple KG learning and model error compensation. As illustrated in Fig. 1, the network is mainly composed of a basic KalmanNet and a specially designed CompenNet.

The entire network framework is built upon a standard discrete-time nonlinear SS model. The basic KalmanNet learns the KG through a neural network. However, it cannot well compensate for the model errors caused by inaccurate prior information.

To address this limitation, CompenKNet integrates the CompenNet branch to generate adaptive compensation terms. The final state estimation result can be expressed as follows:

$$\hat{\mathbf{x}}_{k|k} = \hat{\mathbf{x}}_{k|k-1} + \mathbf{K}_k\big(\mathbf{y}_k - h(\hat{\mathbf{x}}_{k|k-1})\big) + \boldsymbol{\Delta}\mathbf{x}_k \tag{5}$$

where, $\hat{\mathbf{x}}_{k|k-1}$ is the prior state prediction, $\mathbf{K}_k$ is the KG given by KalmanNet, and $\boldsymbol{\Delta}\mathbf{x}_k$ is the state compensation term generated by CompenNet.

B. CompenNet Network Module

CompenNet serves as the core innovative module of the proposed framework, which is devised for the adaptive compensation of model errors. This module adopts a GRU-based architecture, which aligns well with the temporal correlation inherent in motion state estimation and enables end-to-end adaptive compensation.

1) Network input and output:

a) Network input: The input to CompenNet is a fused feature constructed by concatenating four preprocessed components, namely state innovation, observation residual, state difference, and observation difference, which are formally defined in (6)-(9), respectively:

$$\Delta\hat{\mathbf{x}}_{k-1} = \hat{\mathbf{x}}_{k-1|k-1} - \hat{\mathbf{x}}_{k-1|k-2} \tag{6}$$

$$\Delta\hat{\mathbf{y}}_k = \mathbf{y}_k - \hat{\mathbf{y}}_{k|k-1} \tag{7}$$

$$\Delta\tilde{\mathbf{x}}_{k-1} = \hat{\mathbf{x}}_{k-1|k-1} - \hat{\mathbf{x}}_{k-2|k-2} \tag{8}$$

$$\Delta\tilde{\mathbf{y}}_k = \mathbf{y}_k - \mathbf{y}_{k-1} \tag{9}$$

b) Network output: The network ultimately outputs a state compensation term $\boldsymbol{\Delta}\mathbf{x}_k$ that shares the same dimension as the state vector, which is directly added to the KF output to refine the posterior state estimation, as shown below:

$$\boldsymbol{\Delta}\mathbf{x}_k \in \mathbb{R}^d \tag{10}$$

where, d represents the dimension of the state vector.

2) Network structure design: CompenNet employs a lightweight GRU as its core component, accompanied by dedicated pre-processing and post-processing modules, thereby striking a favorable balance between model expressiveness and computational efficiency. The detailed architecture is presented as follows:

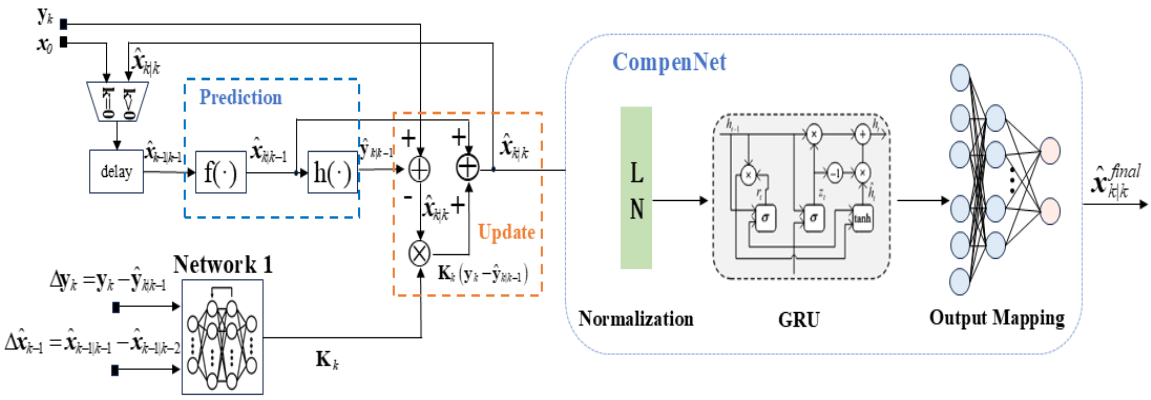

Fig. 1. Overall Architecture of CompenKNet.

a) Input Layer Normalization: Due to the large discrepancies in the numerical ranges of input features, the network training and convergence is hindered, necessitating a normalization module. LN is compatible with GRU and adaptable to variable-length sequences, making it ideal for CompenNet to ensure stable training.

b) GRU Layer: The GRU layer constitutes the core component of CompenNet. Leveraging its strong temporal modeling capacity, it effectively captures the temporal dependencies embedded in the preprocessed features. The forward propagation procedure of the GRU is formulated as (11)-(14):

$$\mathbf{r}_k = \sigma\left(\mathbf{W}_{ir}\mathbf{x}_k + \mathbf{b}_{ir} + \mathbf{W}_{hr}\mathbf{h}_{k-1} + \mathbf{b}_{hr}\right) \tag{11}$$

$$\mathbf{z}_k = \sigma\left(\mathbf{W}_{iz}\mathbf{x}_k + \mathbf{b}_{iz} + \mathbf{W}_{hz}\mathbf{h}_{k-1} + \mathbf{b}_{hz}\right) \tag{12}$$

$$\tilde{\mathbf{h}}_k = \tanh\left(\mathbf{W}_{ih}\mathbf{x}_k + \mathbf{b}_{ih} + \mathbf{r}_k \odot \left(\mathbf{W}_{hh}\mathbf{h}_{k-1} + \mathbf{b}_{hh}\right)\right) \tag{13}$$

$$\mathbf{h}_k = (1 - \mathbf{z}_k) \odot \tilde{\mathbf{h}}_k + \mathbf{z}_k \odot \mathbf{h}_{k-1} \tag{14}$$

where, $\sigma(\cdot)$ is the activation function, $\mathbf{r}_k$ represents the reset gate, $\mathbf{z}_k$ represents the update gate, $\tilde{\mathbf{h}}_k$ represents the candidate hidden state and $\mathbf{h}_k$ represents the hidden state.

To better capture temporal information and preserve generalization ability, the hidden layer dimension is set to 64, and a dropout regularization strategy is adopted.

c) Output mapping layer: Due to the dimensional mismatch between the GRU output and the state estimation vector, a dimensional transformation is required, which constitutes the primary function of the output mapping layer. This operation is implemented via a fully connected layer.

Meanwhile, the range of the compensation term must be properly constrained. Hence, deliberate weight initialization and bias initialization schemes are employed. The weights are initialized from a normal distribution N(0,0.001), whereas the biases are initialized as a zero vector.

C. Three-Stage Joint Training Methodology

To mitigate gradient vanishing and overfitting during training, a three-stage joint training strategy is employed. The final estimation output of CompenKNet is composed of the basic state estimate and the compensation term learned by CompenNet. Although the full network does not directly predict the final state estimate $\hat{\mathbf{x}}_{k|k}$, end-to-end training is still applicable. The Mean Squared Error (MSE) loss function is adopted for network training, as defined in (15).

$$\mathcal{L} = \frac{1}{K}\sum_{k=1}^{K}\left(\mathbf{x}_k - \hat{\mathbf{x}}_{k|k}\right)^2 \tag{15}$$

where K represents the number of samples, $\mathbf{x}_k$ denotes the true value, and $\hat{\mathbf{x}}_{k|k}$ signifies the predicted value.

Let the trainable parameters of the two deep neural networks be denoted as θ_1 and θ_2, respectively. The three-stage joint training strategy can be summarized as follows:

1) KalmanNet Optimize: In this stage, all parameters θ_2 of CompenNet are frozen, and only KalmanNet is trained to search for the optimal parameter set θ_1^* that minimizes the loss function. The learning rate (lr) is set to 1e-3.

2) CompenNet Optimize: In this stage, the optimized parameters θ_1^* of KalmanNet are fixed, while the parameters θ_2 of CompenNet are unfrozen to find the optimal θ_2^*. The lr is set to 5e-4 with weight decay.

3) Joint Optimize: In this stage, all parameters including θ_1^* and θ_2^* are unfrozen, and joint fine-tuning is performed to obtain the final optimized parameters θ_1^{**} and θ_2^{**}. The lr is set to 1e-4 with weight decay.

IV. Experiments

A. Experimental Details

All experiments are implemented on a laptop equipped with an Intel Core i9-13900HX processor (2.20 GHz) and an NVIDIA GeForce RTX 4060 laptop GPU with 8 GB memory. Each of the three training stages runs for 1000 epochs using the Adam optimizer.

Experiments are conducted separately on synthetic and real-world datasets, with a batch size of 64 for both. To alleviate overfitting, weight decay and random dropout are applied. Due to differences in experimental complexity, the regularization coefficient and dropout probability are set to 1e-4 and 0.3 for the synthetic dataset, and 1e-5 and 0.1 for the real-world dataset, respectively.

B. Results on Synthetic Dataset

Synthetic data is first employed to evaluate CompenKNet under ideal conditions. The constant turn (CT) model is adopted to generate synthetic trajectories. To thoroughly validate the effectiveness, synthetic data under both linear and nonlinear observation models are produced. The SS models used for the simulated data are given by (16) and (17).

$$\mathbf{x}_{k+1} = \begin{bmatrix} \cos\theta & -\sin\theta \\ \sin\theta & \cos\theta \end{bmatrix} \mathbf{x}_k + \mathbf{q}_k \tag{16}$$

$$\mathbf{y}_k = \begin{cases} \mathbf{x}_k + \mathbf{r}_k, & \text{linear}, \\ \begin{bmatrix} \|\mathbf{x}_k\|_2^2 & \operatorname{atan2}(\mathbf{x}_k) \end{bmatrix}^\top + \mathbf{r}_k, & \text{nonlinear}, \end{cases} \tag{17}$$

where $\mathbf{x}_k = \begin{bmatrix} x_k & y_k \end{bmatrix}^\top \in \mathbb{R}^2$ is the state vector and θ is constant rotation speed.

For linear synthetic dataset, the effectiveness of various algorithms is evaluated using the MSE metric, with the results presented in Table I.

TABLE I
THE MSE RESULTS ON LINEAR DATA

Algorithm	Mean Square Error/dB
EKF	-13.27
KalmanNet	-12.89
KalmanNet v2	-12.02
Split-KalmanNet	-12.76
CompenKNet(Ours)	**-15.00**

As for nonlinear synthetic dataset, the results obtained by different algorithms are visualized to better validate the effectiveness of CompenKNet.

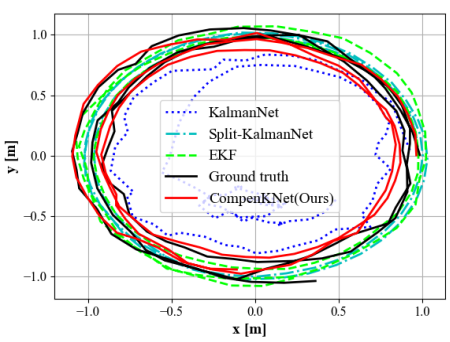

Fig. 2. The Tracking Results of Different Algorithms on Nonlinear Data.

C. Results on Real-world Dataset

The Michigan NCLT dataset [8] is adopted to evaluate the algorithm performance in real-world scenarios. This dataset contains motion trajectories of a Segway robot, including ground truth and noise-corrupted odometry measurements. Owing to inaccurate dynamic modeling, the dataset represents a typical scenario involving model errors.

Noise-affected odometry measurements are fed into the algorithms to obtain more accurate position estimates. The output results of different methods are illustrated in Fig. 3.

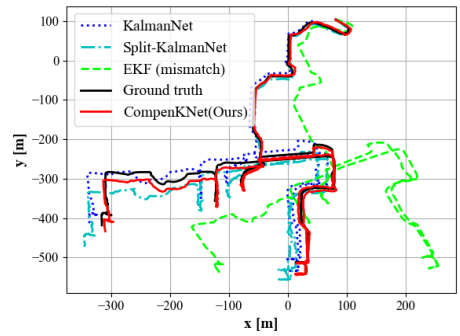

Fig. 3. The Results of Different Algorithms on NCLT Dataset.

V. CONCLUSION

To address performance degradation caused by model errors, this paper proposes CompenKNet. By integrating KalmanNet with a dedicated CompenNet, CompenKNet realizes adaptive state estimation with explicit model error compensation. With a dual-branch architecture, the method decouples Kalman gain learning and model error compensation. In addition, a three-stage training strategy is designed to ensure stable and effective optimization. Experimental results on both synthetic and real-world datasets verify the effectiveness and superiority of the proposed CompenKNet.

Despite promising performance, several limitations still exist. First, CompenKNet is currently designed for discrete-time SS models. Its extension to continuous-time systems deserves further exploration. Second, the present training depends on labeled data. Investigating self-supervised or semi-supervised learning strategies can reduce the reliance on extensive ground truth and further improve generalization. Finally, the adaptability and efficiency on resource-constrained edge devices, such as satellite platforms, still need to be enhanced.

REFERENCES

[1] J. Zhang, X. Xiang, and W. Li, "Advances in marine intelligent electromagnetic detection system, technology, and applications: A review," IEEE Sensors J., vol. 23, no. 5, pp. 4312–4326, Mar. 2023.

[2] Z. Chen et al., "Predictive autonomy for UAV remote sensing: A survey of video prediction," Remote Sensing, vol. 17, no. 20, p. 3423, Oct. 2025.

[3] R. E. Kalman, "A new approach to linear filtering and prediction problems," Journal of Basic Engineering, vol. 82, no. 1, pp. 35–45, Mar. 1960.

[4] J. H. Lee and N. L. Ricker, "Extended kalman filter based nonlinear model predictive control," Ind. Eng. Chem. Res., vol. 33, no. 6, pp. 1530–1541, Jun. 1994.

[5] S. Julier, J. Uhlmann, and H. F. Durrant-Whyte, "A new method for the nonlinear transformation of means and covariances in filters and estimators," IEEE Trans. Automat. Contr., vol. 45, no. 3, pp. 477–482, Mar. 2000.

[6] S. Kim, I. Petrunin, and H.-S. Shin, "A review of bayes filters with machine learning techniques and their applications," Information Fusion, vol. 114, p. 102707, Feb. 2025.

[7] G. Revach, N. Shlezinger, X. Ni, A. L. Escoriza, R. J. G. Van Sloun, and Y. C. Eldar, "KalmanNet: Neural network aided kalman filtering for partially known dynamics," IEEE Trans. Signal Process., vol. 70, pp. 1532–1547, 2022.

[8] N. Carlevaris-Bianco, A. K. Ushani, and R. M. Eustice, "University of michigan north campus long-term vision and lidar dataset," The International Journal of Robotics Research, vol. 35, no. 9, pp. 1023–1035, Aug. 2016.